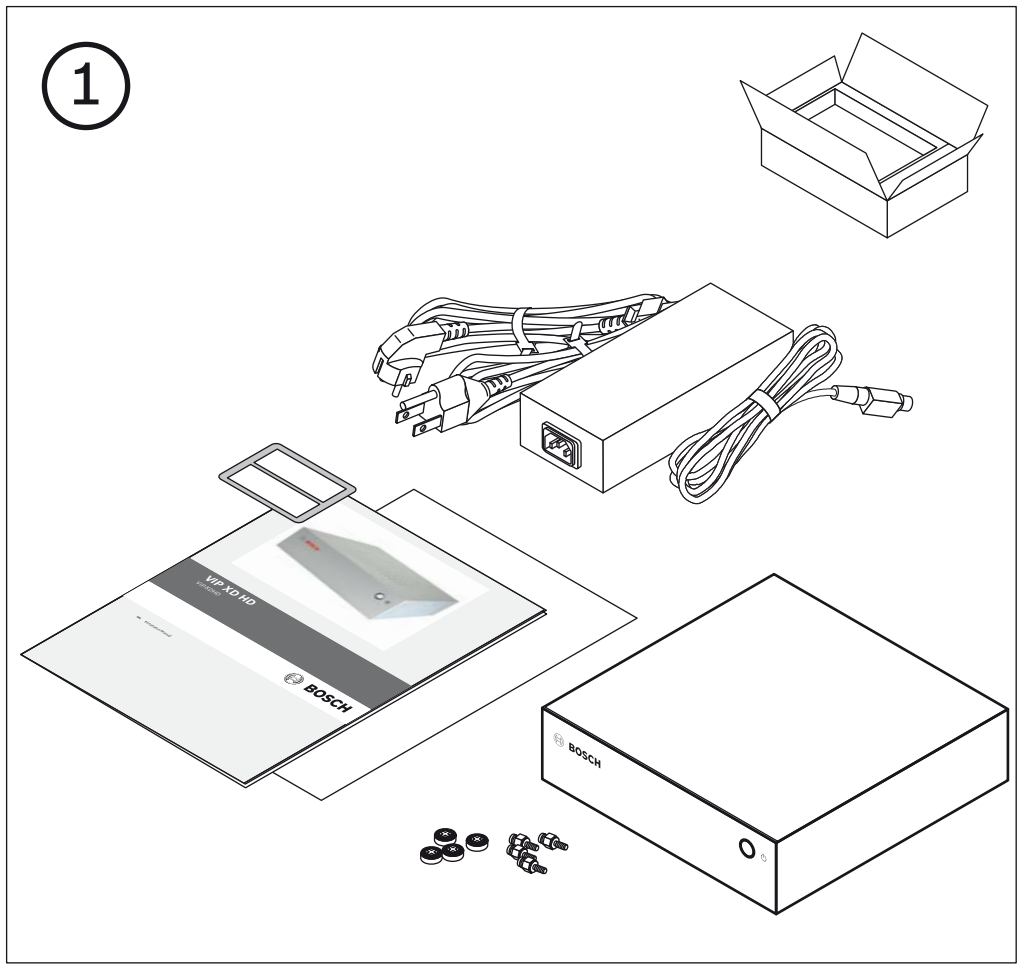
1
VIP XD HD
BOSCH
BOSCH

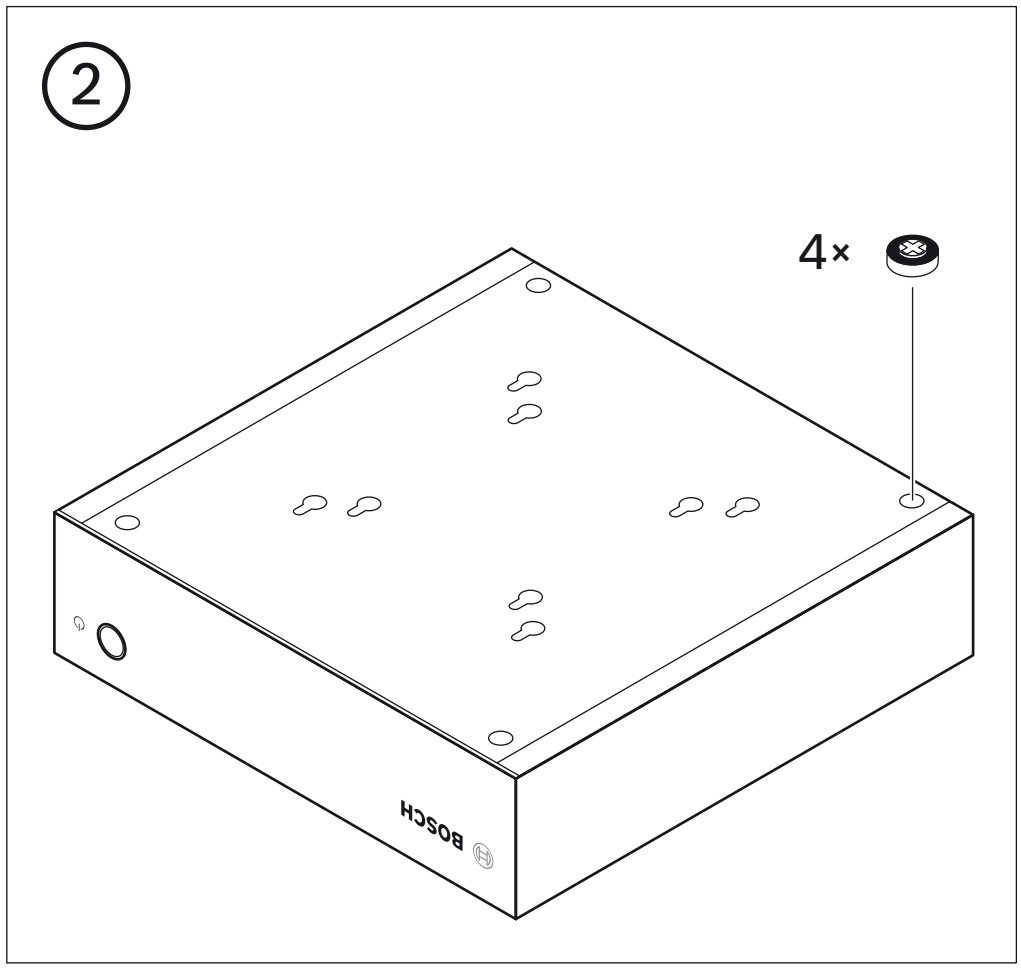
2
4×
BOSCH

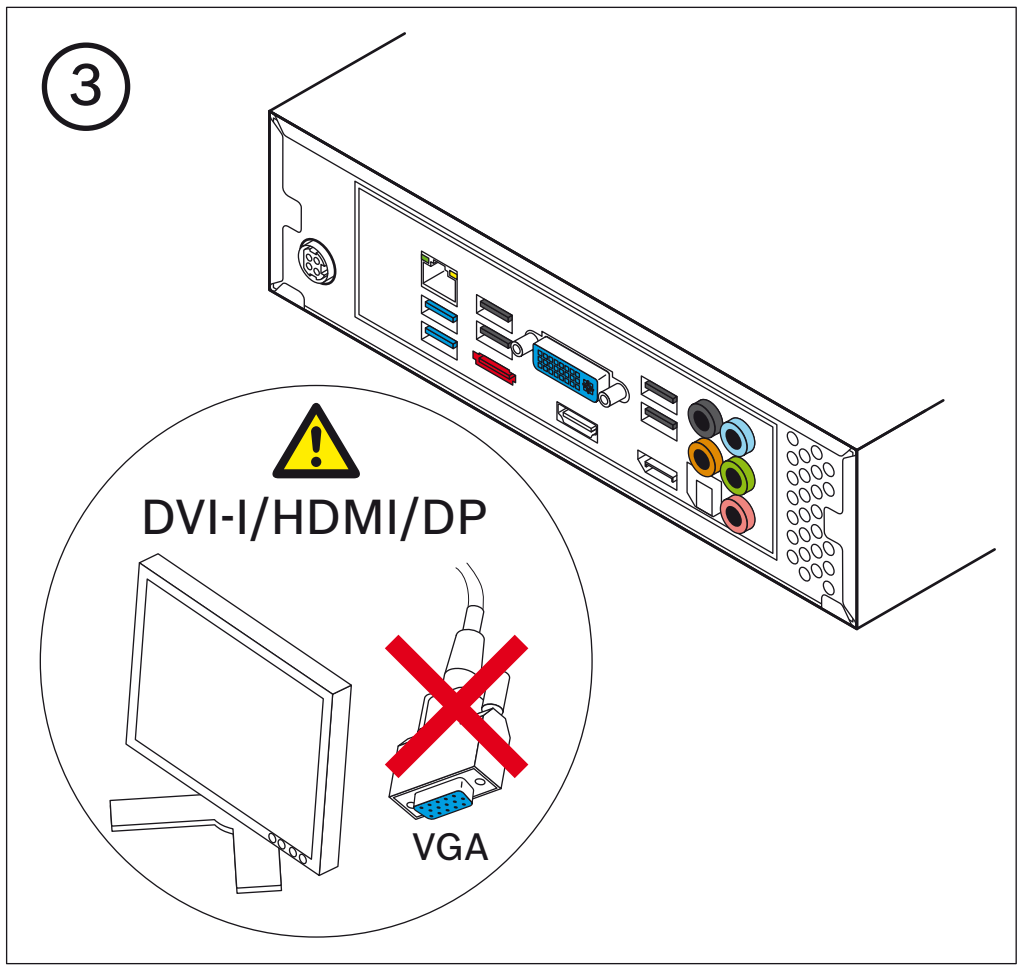
3
DVI-I/HDMI/DP
VGA

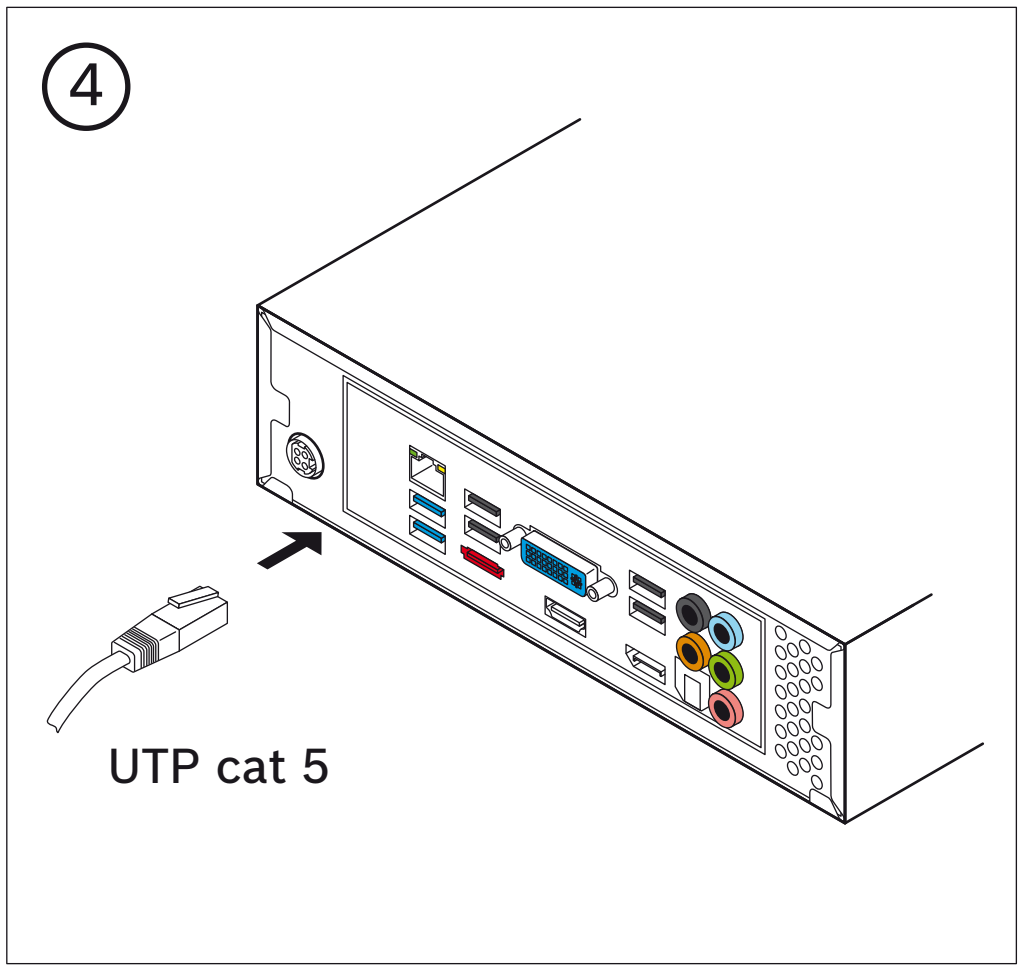
4
UTP cat 5

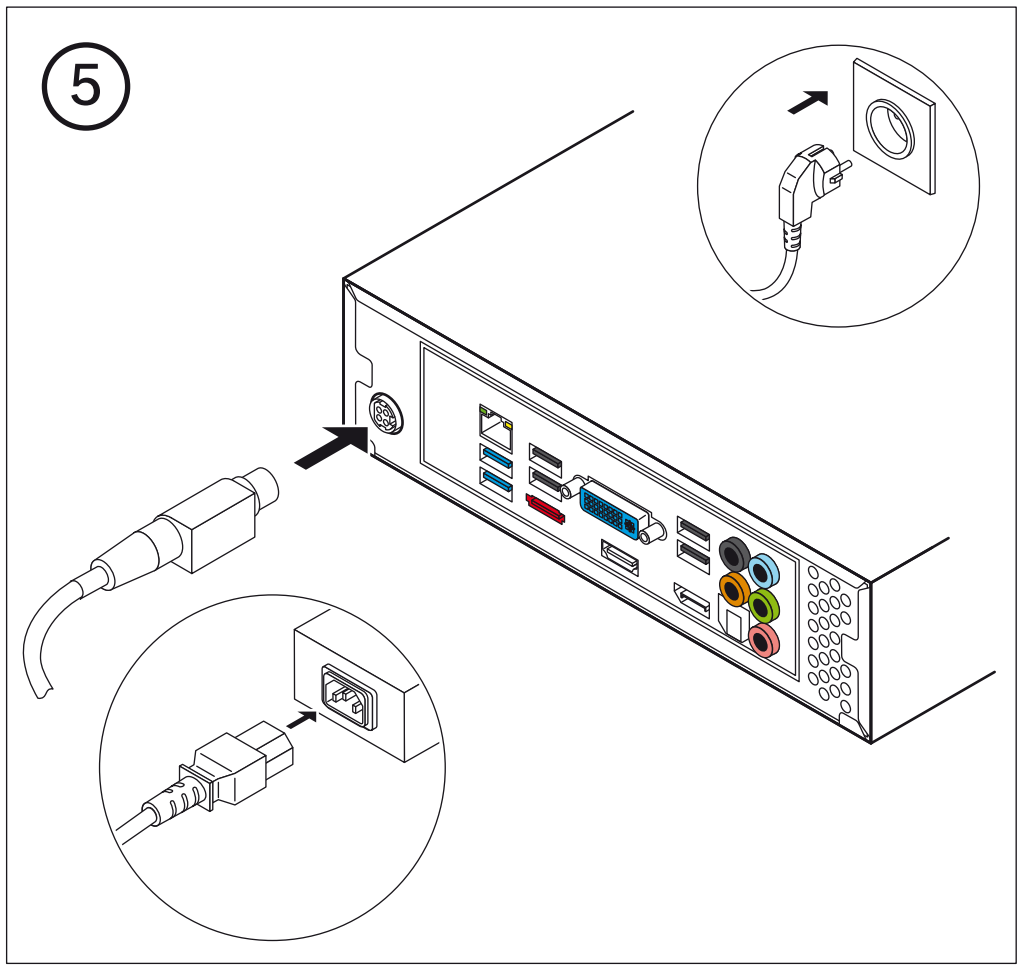
5

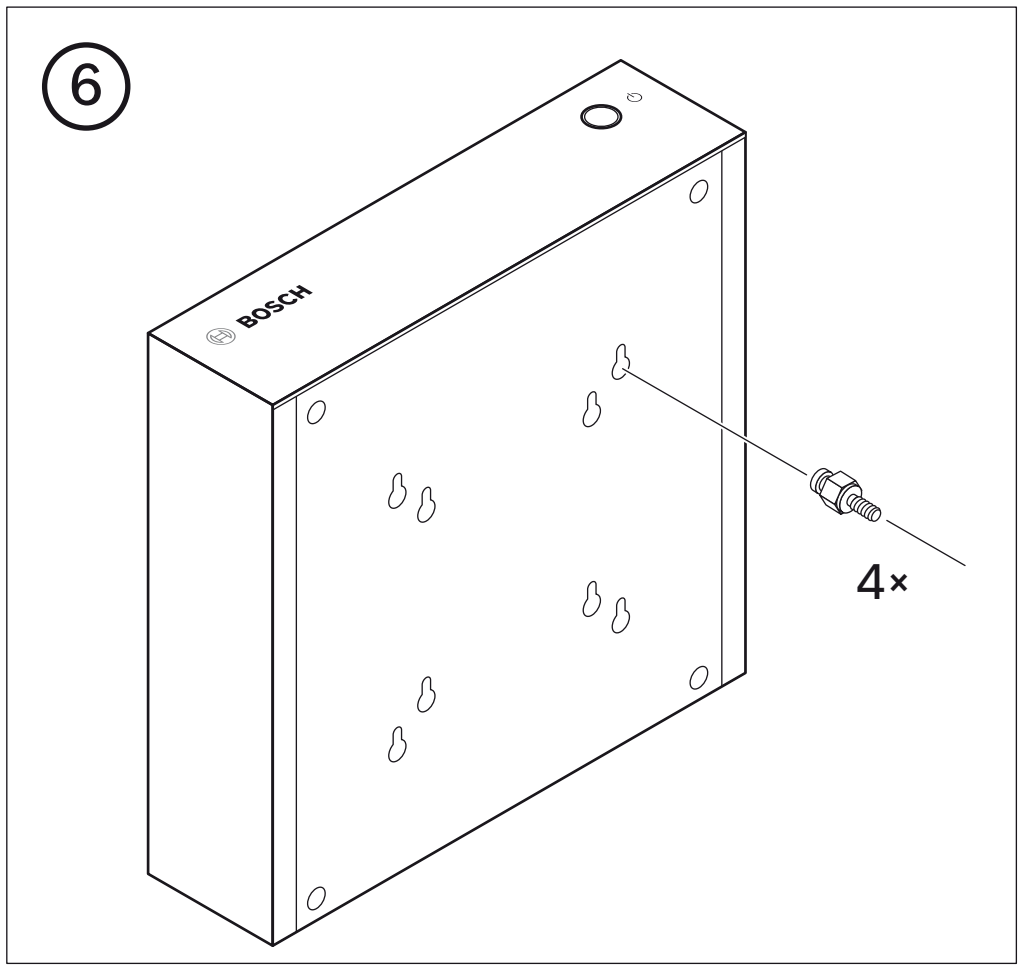
6
BOSCH
4×